Duct Heaters

LDH SERIES and D SERIES

Constructed of sturdy 0.430 in. (11 mm) diameter WATROD™ heating elements mounted to a 1/4 in. (6 mm) thick steel flange, duct heaters are easily adapted to many non-pressurized air-heating systems.

They are easily installed in applications requiring a wide range of temperature versus air flow combinations.

The modular duct heater offers increased reliability. The individual modules are removable through the housing of the assembly, which eliminates the need to pull the complete heater from the duct work. This reduces downtime costs because the heating elements can be replaced individually. Performance improvements include quicker response time and reduced infiltration from the air stream being heated into the electrical enclosure.

Watlow® duct heaters offer advantages over gas or oil fired and open coil electric units with:

- Installation flexibility—no flues or fuel lines
- 100 percent energy efficient—no energy loss up the flue
- Universal availability of electricity
- Resistance coil in sheath is protected from corrosive environments

Performance Capabilities

- Watt densities up to 40 W/in^2 (6.2 W/cm^2)
- Recommended process temperatures from -20 to 1200°F (-29 to 650°C)
- Catalog P/N wattages up to 225kW
- Voltages up to 600VAC

Features and Benefits

Long life alloy 840 sheath
- Resists corrosion/oxidation while protecting resistance coils against contamination

MgO insulation filled elements compacted to rock hard density
- Maximizes dielectric strength, heat transfer and life

Field replaceable heating elements
- Permits easy service and reduces downtime. Element change-out is made simple by a single screw clamp (D SERIES only)

3 1/2 in. (90 mm) thick mineral insulation
- Keeps wiring cooler and reduces heat loss

Silicone resin seals rated to 221°F (105°C)
- Protects elements against moisture and other contaminants

General purpose terminal enclosure
- Offers easy access to wiring

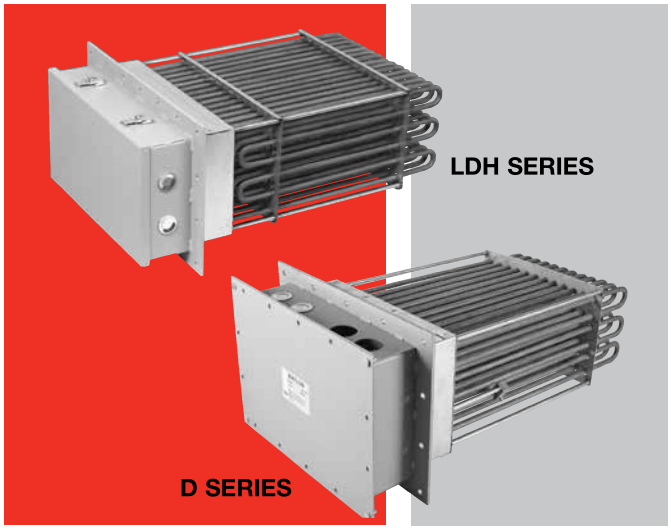

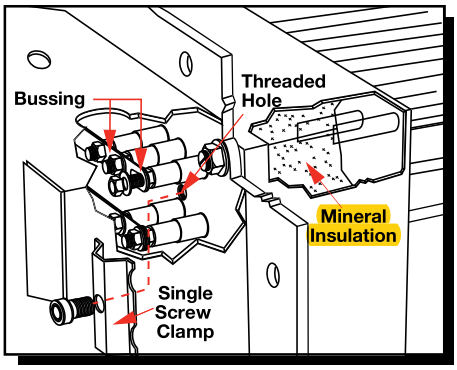

1/4 in. (6 mm) inside diameter thermowell
- Accepts an optional Type J or K thermocouple for accurate sheath temperature sensing (D SERIES only)

Rigid stainless steel supports
- Prevents element sagging or deformation in various mounting positions

1/4 in. (6 mm) thick steel flange with 3/8 in. (9.5 mm) diameter mounting holes
- Easily bolts to the duct wall

WATROD hairpins are repressed (recompacted) after bending to assure MgO density
- Eliminates hot spots and electrical insulation voids

Stock heaters feature from 3 to 60 elements
- Meets a wide variety of kilowatt demands

One or three phase voltages
- Meets local power supplies

Maximum 48 amperes per circuit
- Complies with National Electrical Code (NEC)

Duct heaters with general purpose enclosures meet UL® and CSA component recognition to 480 and 600VAC maximum respectively—UL® and CSA file numbers are E52951 and 31388

Duct Heaters

LDH SERIES and D SERIES

Typical Applications

- Drying ovens
- Autoclaves
- Furnaces
- Load banks
- Heat treating
- Reheating
- HVAC
- Paint drying

Choosing a Duct Heater

The English and metric graphs, shown on the following pages will help you to select the correct duct heater. These graphs include: *Watt Density vs. Air Temperature/ Velocity, Watt Density vs. Sheath Temperature and Pressure Drop vs. Air Velocity*.

These graphs, with the quick formulas on this page, along with information specific to your application, will determine the correct duct heater specifications. However, if engineering assistance is needed, contact your Watlow representative.

Required Application Information

- Desired outlet air temperature
- Inlet air temperature
- Delta T—the temperature difference between inlet and desired outlet temperature
- Air volume (CFM/CMM) measured at both inlet temperature and pressure
- Air velocity in feet per minute (FPM); meters per minute (MPM) which equals:

English

$$\text{FPM} = \frac{\text{CFM measured at standard conditions}}{\text{Duct cross section area at heater in ft}^2}$$

Metric

$$\text{MPM} = \frac{\text{CMM measured at normal conditions}}{\text{Duct cross section area at heater in m}^2}$$

- Minimum duct heater wattage (kW). This can be determined by:

English

$$\text{kW} = \frac{\text{CFM x Delta T (°F) x 1.1 (safety factor)}}{3000}$$

Metric

$$\text{kW} = \frac{\text{CMM x Delta T (°C) x 1.1 (safety factor)}}{48}$$

Note: The duct heater, or combination of duct heaters, used for the process should be equal to or exceed the minimum wattage calculation.

Duct Heaters

LDH SERIES and D SERIES

Watt Density vs. Air Temperature/Velocity

To decide watt density requirements, first determine the desired outlet air temperature and velocity in feet per minute. Then, follow the lines on the graph for velocity and process temperature to the watt density curve's intersecting point. This shows the recommended watt density based on a maximum sheath temperature of 1400°F (760°C). **For longer heater life, lower watt densities should be chosen.**

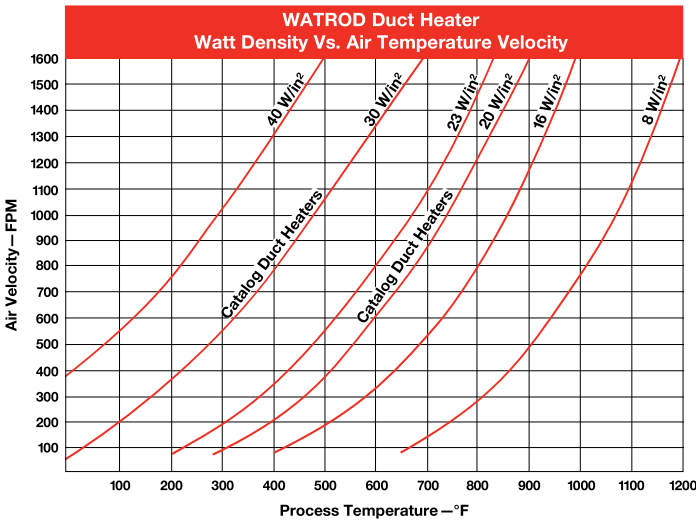

Estimated Sheath Temperature = 1400°F

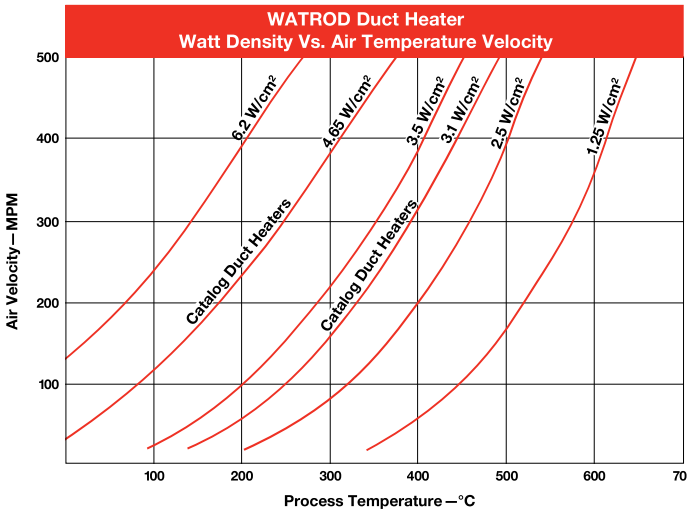

Estimated Sheath Temperature = 760°C

Watt Density vs. Sheath Temperature

The *Watt Density vs. Sheath Temperature* graph shows the air velocity (FPM or MPM) required to operate a WATROD duct heater at specific watt densities or sheath temperatures. Also depicted is the appropriate watt density vs. sheath temperature at a specified air flow.

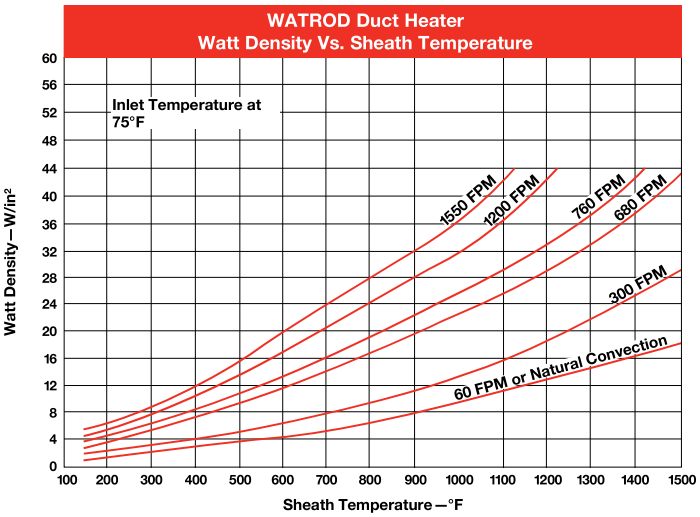

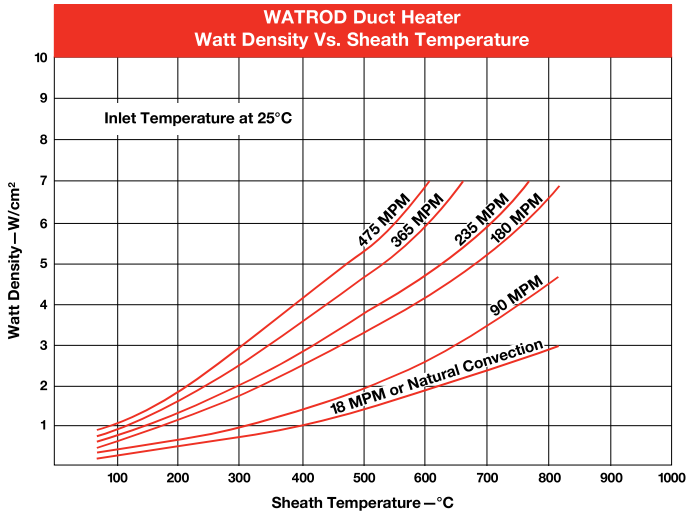

Duct Heaters

LDH SERIES and D SERIES

Pressure Drop vs. Air Velocity

The rate at which pressure drops through the duct heater is critical for properly sizing blowers and pumps. *The Pressure Drop vs. Air Velocity* graph gives recommended maximum velocities in feet per minute and meters per minute according to the air velocity and duct heater size.

To determine the pressure drop through the duct heater, follow the air velocity (FPM or MPM) over to the appropriate curve, which identifies the duct heater size. Then, take the intersecting point down to the approximate pressure drop value.

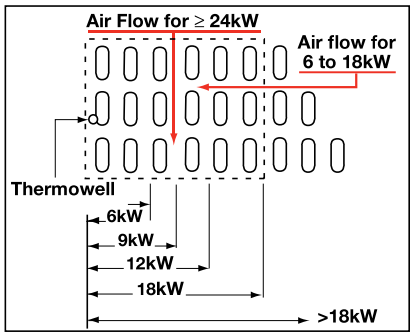

Note: Viewing from the element ends—the recommended air flow direction through element bundle changes at >18kW.

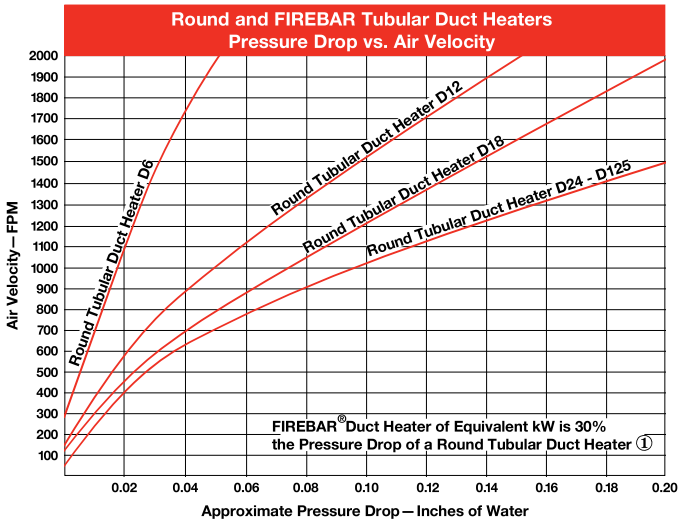

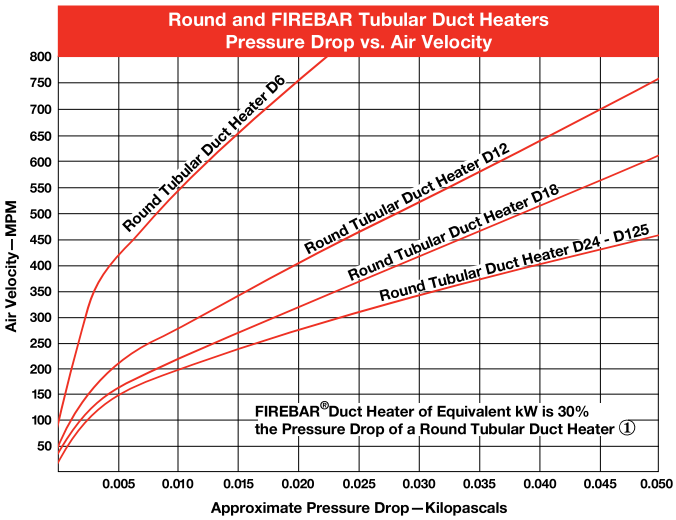

① FIREBAR® flat tubular element duct heaters are available as extended capabilities to enhance your application output or performance. Although duct heaters are not normally constructed with FIREBAR elements, the pressure drop reduction using FIREBAR as a distinct advantage is shown above.

Options

Wattages/Voltages

To meet specific application needs, voltage and wattage combinations outside stock product parameters are available.

For more information about this option, contact your Watlow representative.

Duct Heaters

LDH SERIES and D SERIES

Options *(Continued)*

Terminal Enclosures

In addition to the standard, general purpose terminal enclosure, Watlow offers a moisture resistant optional terminal enclosure to meet specific application requirements.

Thermocouples

Type J or **K** thermocouples, inserted in the thermowell, accurately sense element sheath temperature for over-temperature conditions.

To sense process temperature, the sensing element should be located downstream from the duct heater. This will eliminate incorrect sensing caused by radiant heat.

Thermocouples are supplied with 120 in. (3050 mm) leads, longer lead lengths are available (this applies to "D" SERIES only). Unless otherwise specified, thermocouples are supplied with temperature ranges detailed on the *Thermocouple Types* chart.

Using a thermocouple requires an appropriate temperature and power controller. These must be purchased separately. Watlow offers a wide variety of temperature and power controllers to meet virtually all applications. Temperature controllers can be configured to accept process variable inputs, too. Contact your Watlow representative for details.

To order a thermocouple, add the appropriate suffix letter to the duct heater's base part number, as indicated on the *Ordering Information* chart on page 404.

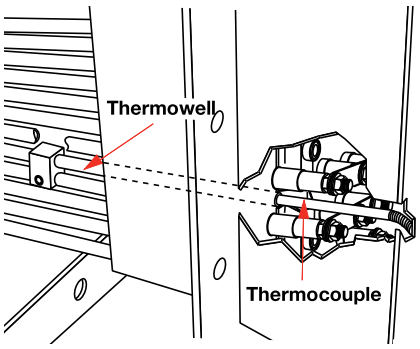

Duct heater thermowell holds thermocouple for sensing sheath temperature.

Thermocouple Types

ASTM Type	Conductor Characteristics Positive	Negative	Recommended① Temperature Range °F	(°C)
J	Iron (Magnetic)	Constantan (Non-magnetic)	0 to 1000	(-20 to 540)
K	Chromel® (Non-magnetic)	Alumel® (Magnetic)	0 to 2000	(-20 to 1100)

①**Type J** and **Type K** thermocouples are rated 32 to 1382°F and 32 to 2282°F (0-750°C and 0-1250°C), respectively. Watlow does not recommend exceeding temperature ranges shown on this chart for the tubular product line.

Application Hints

- Mount duct heaters horizontally to lower enclosure temperatures and promote unit life.
- Orient heating elements as per the air flow illustration on page 394.
- Promote heater life by keeping sheath temperature below the 1400°F (760°C) maximum.
- Measure process temperature in the outlet stream, away from the heater.
- Maintain wiring integrity by keeping enclosure temperature below 400°F (205°C).
- Thermal cycling can cause terminations to loosen. Periodically check and tighten all electrical connections.
- Size power feeder wires in accordance with NEC and other applicable codes.
- Protect employees against electrical shock by properly grounding the unit per NEC specifications.

EXTENDED CAPABILITY

Extended Capabilities For Duct Heaters

LDH SERIES and D SERIES

Performance Capabilities

- Wattages to 2.2 megawatts

Features and Benefits

Ceramic fiber insulation available

- Keeps wiring cooler and reduces heat loss

Greater than 1/4 in. (6 mm) with 304 or 316 stainless steel flange material

- Easily bolts to the duct wall

60 plus element designs available

- Meets a wide variety of kilowatt demands

Options

Sheath Material

Watlow duct heaters can be made with the following sheath materials:

- 304, 316, 321 SS
- Alloy 800, 840
- Laminated alloy 600 (hi-temp)
- Hastelloy C276

Contact your Watlow representative for details and availability.

Terminal Enclosures

In addition to the standard, general purpose terminal enclosure, Watlow offers the following optional terminal enclosures to meet specific application requirements:

- Explosion resistant (contact your Watlow representative)
- High-temperature stand-off enclosures

Duct Heaters

LDH SERIES

Application: High Temperature Air 800°F (427°C)

- Welded alloy 840 WATROD elements
- Without thermostat
- General purpose enclosure
- Steel flange

① 3 and 6 element heaters have (1) 1 inch NPT conduit opening; 9, 12 and 15 element heaters have (2) 1 inch NPT conduit openings; 18 element heaters have (2) 1 1/2 inch NPT conduit openings; 21 element (B= 20 1/4 in.) heaters have (2) 1 1/2 inch NPT conduit openings; remaining 21 and 24 element heaters have (3) 1 1/2 inch NPT conduit openings

② All flanges are 12 inches wide

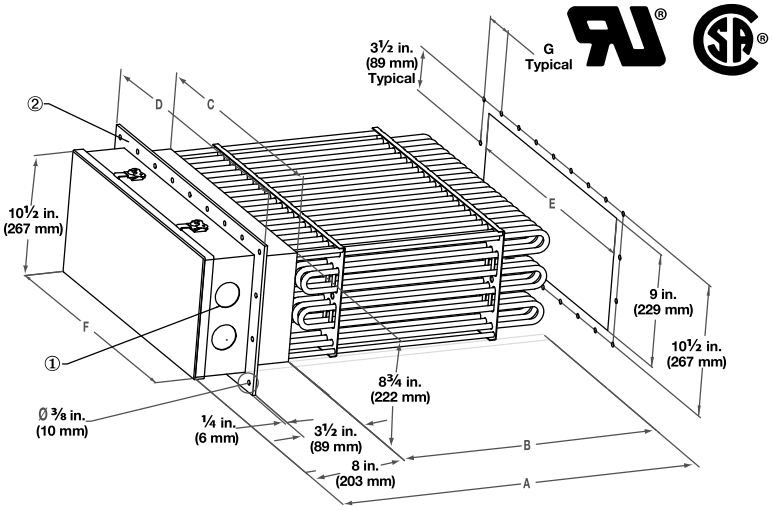

# of Elem	Volts	kW	Ph	# Circ	Part Number	Del.	Ship Wt. lbs (kg)	"A" Dim. in. (mm)	"B" Dim. in. (mm)	"C" Dim. in. (mm)	"D" Dim. in. (mm)	"E" Dim. in. (mm)	"F" Dim. in. (mm)	"G" Dim. in. (mm)
20 W/in² (3.1 W/cm²)														
3	240	9.0	1	1	**LDH9S10S**	M	55 (25)	28 1/4 (718)	20 1/4 (514)	3 3/4 (95)	7 1/2 (191)	4 (102)	4 5/8 (117.5)	3 (76)
3	240	9.0	3	1	**LDH9S3S**	M	55 (25)	28 1/4 (718)	20 1/4 (514)	3 3/4 (95)	7 1/2 (191)	4 (102)	4 5/8 (117.5)	3 (76)
3	480	9.0	1	1	**LDH9S11S**	M	55 (25)	28 1/4 (718)	20 1/4 (514)	3 3/4 (95)	7 1/2 (191)	4 (102)	4 5/8 (117.5)	3 (76)
3	480	9.0	3	1	**LDH9S5S**	M	55 (25)	28 1/4 (718)	20 1/4 (514)	3 3/4 (95)	7 1/2 (191)	4 (102)	4 5/8 (117.5)	3 (76)
6	240	18.0	1	2	**LDH18S10S**	M	65 (30)	28 1/4 (718)	20 1/4 (514)	6 3/4 (171)	10 1/2 (267)	7 (178)	7 5/8 (193.7)	3 (76)
6	240	18.0	3	1	**LDH18S3S**	M	65 (30)	28 1/4 (718)	20 1/4 (514)	6 3/4 (171)	10 1/2 (267)	7 (178)	7 5/8 (193.7)	3 (76)
6	480	18.0	1	1	**LDH18S11S**	M	65 (30)	28 1/4 (718)	20 1/4 (514)	6 3/4 (171)	10 1/2 (267)	7 (178)	7 5/8 (193.7)	3 (76)
6	480	18.0	3	1	**LDH18S5S**	M	65 (30)	28 1/4 (718)	20 1/4 (514)	6 3/4 (171)	10 1/2 (267)	7 (178)	7 5/8 (193.7)	3 (76)
9	240	27.0	1	3	**LDH27S10S**	M	120 (55)	28 1/4 (718)	20 1/4 (514)	9 3/4 (248)	13 1/2 (343)	10 (254)	10 5/8 (269.9)	3 (76)
9	240	27.0	3	3	**LDH27S3S**	M	120 (55)	28 1/4 (718)	20 1/4 (514)	9 3/4 (248)	13 1/2 (343)	10 (254)	10 5/8 (269.9)	3 (76)
9	480	27.0	1	3	**LDH27S11S**	M	120 (55)	28 1/4 (718)	20 1/4 (514)	9 3/4 (248)	13 1/2 (343)	10 (254)	10 5/8 (269.9)	3 (76)
9	480	27.0	3	1	**LDH27S5S**	M	120 (55)	28 1/4 (718)	20 1/4 (514)	9 3/4 (248)	13 1/2 (343)	10 (254)	10 5/8 (269.9)	3 (76)
12	240	36.0	1	4	**LDH36S10S**	M	135 (62)	28 1/4 (718)	20 1/4 (514)	12 3/4 (324)	16 1/2 (419)	13 (330)	13 5/8 (346.1)	3 (76)
12	240	36.0	3	2	**LDH36S3S**	M	135 (62)	28 1/4 (718)	20 1/4 (514)	12 3/4 (324)	16 1/2 (419)	13 (330)	13 5/8 (346.1)	3 (76)
12	480	36.0	1	2	**LDH36S11S**	M	135 (62)	28 1/4 (718)	20 1/4 (514)	12 3/4 (324)	16 1/2 (419)	13 (330)	13 5/8 (346.1)	3 (76)
12	480	36.0	3	1	**LDH36S5S**	M	135 (62)	28 1/4 (718)	20 1/4 (514)	12 3/4 (324)	16 1/2 (419)	13 (330)	13 5/8 (346.1)	3 (76)
15	240	45.0	3	5	**LDH45S3S**	M	195 (89)	28 1/4 (718)	20 1/4 (514)	15 3/4 (400)	19 1/2 (495)	16 (406)	17 7/8 (454.0)	3 (76)
15	480	45.0	1	3	**LDH45S11S**	M	195 (89)	28 1/4 (718)	20 1/4 (514)	15 3/4 (400)	19 1/2 (495)	16 (406)	17 7/8 (454.0)	3 (76)
15	480	45.0	3	5	**LDH45S5S**	M	195 (89)	28 1/4 (718)	20 1/4 (514)	15 3/4 (400)	19 1/2 (495)	16 (406)	17 7/8 (454.0)	3 (76)
18	240	54.0	3	3	**LDH54S3S**	M	205 (93)	28 1/4 (718)	20 1/4 (514)	18 3/4 (476)	22 1/2 (572)	19 (483)	20 7/8 (530.2)	3 (76)
18	480	54.0	1	3	**LDH54S11S**	M	205 (93)	28 1/4 (718)	20 1/4 (514)	18 3/4 (476)	22 1/2 (572)	19 (483)	20 7/8 (530.2)	3 (76)
18	480	54.0	3	2	**LDH54S5S**	M	205 (93)	28 1/4 (718)	20 1/4 (514)	18 3/4 (476)	22 1/2 (572)	19 (483)	20 7/8 (530.2)	3 (76)
21	240	63.0	3	7	**LDH63S3S**	M	235 (107)	28 1/4 (718)	20 1/4 (514)	21 3/4 (552)	25 1/2 (848)	22 (559)	23 7/8 (606.4)	3 (76)
21	480	63.0	1	3	**LDH63S11S**	M	235 (107)	28 1/4 (718)	20 1/4 (514)	21 3/4 (552)	25 1/2 (848)	22 (559)	23 7/8 (606.4)	3 (76)
21	480	63.0	3	7	**LDH63S5S**	M	235 (107)	28 1/4 (718)	20 1/4 (514)	21 3/4 (552)	25 1/2 (848)	22 (559)	23 7/8 (606.4)	3 (76)
21	240	79.0	3	7	**LDH79S3S**	M	260 (118)	33 (838)	25 (635)	21 3/4 (552)	25 1/2 (848)	22 (559)	23 7/8 (606.4)	3 (76)
21	480	79.0	1	7	**LDH79S11S**	M	260 (118)	33 (838)	25 (635)	21 3/4 (552)	25 1/2 (848)	22 (559)	23 7/8 (606.4)	3 (76)
21	480	79.0	3	7	**LDH79S5S**	M	260 (118)	33 (838)	25 (635)	21 3/4 (552)	25 1/2 (848)	22 (559)	23 7/8 (606.4)	3 (76)
21	240	105.0	3	7	**LDH105S3S**	M	290 (132)	40 1/2 (1029)	32 1/2 (826)	21 3/4 (552)	25 1/2 (848)	22 (559)	23 7/8 (606.4)	3 (76)
21	480	105.0	1	7	**LDH105S11S**	M	290 (132)	40 1/2 (1029)	32 1/2 (826)	21 3/4 (552)	25 1/2 (848)	22 (559)	23 7/8 (606.4)	3 (76)
21	480	105.0	3	7	**LDH105S5S**	M	290 (132)	40 1/2 (1029)	32 1/2 (826)	21 3/4 (552)	25 1/2 (848)	22 (559)	23 7/8 (606.4)	3 (76)
21	480	131.0	3	7	**LDH131S5S**	M	310 (141)	49 1/2 (1257)	41 1/2 (1054)	21 3/4 (552)	25 1/2 (848)	22 (559)	23 7/8 (606.4)	3 (76)
24	480	150.0	3	4	**LDH150S5S**	M	330 (150)	49 1/2 (1257)	41 1/2 (1054)	24 3/4 (629)	28 1/2 (724)	25 (635)	26 7/8 (682.6)	3 (76)

- **M** - Manufacturing lead times

Truck Shipment only

Notes:

- See *Watt Density vs. Air Temperature/Velocity* charts on page 393 to confirm suitability in the application.

Duct Heaters

LDH SERIES

Application: Medium Temperature Air 750°F (399°C)

- Welded alloy 840 WATROD elements
- Without thermostat
- General purpose enclosure
- Steel flange

① 3 and 6 element heaters have (1) 1 inch NPT conduit opening; 9, 12 and 15 element heaters have (2) 1 inch NPT conduit openings; 18 element heaters have (2) 1 1/2 inch NPT conduit openings; 21 element (B= 20 1/4 in.) heaters have (2) 1 1/2 inch NPT conduit openings; remaining 21 and 24 element heaters have (3) 1 1/2 inch NPT conduit openings

② All flanges are 12 inches wide

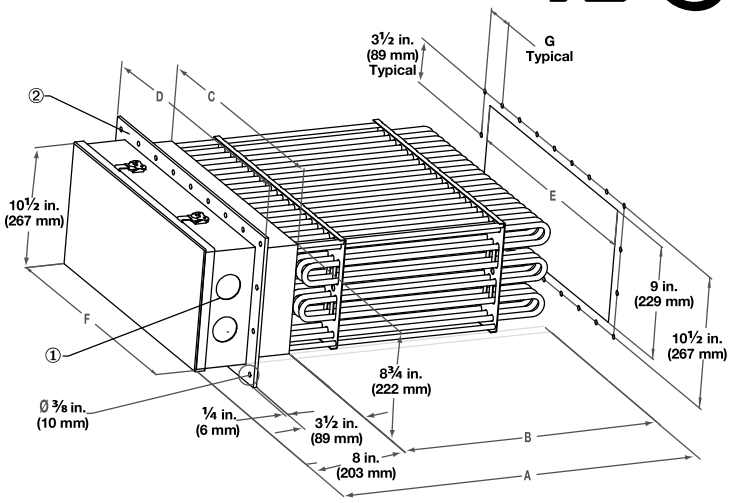

# of Elem	Volts	kW	Ph	# Circ	Part Number	Del.	Ship Wt. lbs. (kg)	"A" Dim. in. (mm)	"B" Dim. in. (mm)	"C" Dim. in. (mm)	"D" Dim. in. (mm)	"E" Dim. in. (mm)	"F" Dim. in. (mm)	"G" Dim. in. (mm)
30 W/in² (4.7 W/cm²)														
3	240	14.0	1	3	**LDH14SX10S**	M	55 (25)	28 1/4 (718)	20 1/4 (514)	3 3/4 (95)	7 1/2 (191)	4 (102)	4 5/8 (117.5)	3 (76)
3	240	14.0	3	1	**LDH14SX3S**	M	55 (25)	28 1/4 (718)	20 1/4 (514)	3 3/4 (95)	7 1/2 (191)	4 (102)	4 5/8 (117.5)	3 (76)
3	480	14.0	1	1	**LDH14SX11S**	M	55 (25)	28 1/4 (718)	20 1/4 (514)	3 3/4 (95)	7 1/2 (191)	4 (102)	4 5/8 (117.5)	3 (76)
3	480	14.0	3	1	**LDH14SX5S**	M	55 (25)	28 1/4 (718)	20 1/4 (514)	3 3/4 (95)	7 1/2 (191)	4 (102)	4 5/8 (117.5)	3 (76)
6	240	27.0	1	3	**LDH27SX10S**	M	65 (30)	28 1/4 (718)	20 1/4 (514)	6 3/4 (171)	10 1/2 (267)	7 (178)	7 5/8 (193.7)	3 (76)
6	240	27.0	3	2	**LDH27SX3X**	M	65 (30)	28 1/4 (718)	20 1/4 (514)	6 3/4 (171)	10 1/2 (267)	7 (178)	7 5/8 (193.7)	3 (76)
6	480	27.0	1	2	**LDH27SX11S**	M	65 (30)	28 1/4 (718)	20 1/4 (514)	6 3/4 (171)	10 1/2 (267)	7 (178)	7 5/8 (193.7)	3 (76)
6	480	27.0	3	1	**LDH27SX5S**	M	65 (30)	28 1/4 (718)	20 1/4 (514)	6 3/4 (171)	10 1/2 (267)	7 (178)	7 5/8 (193.7)	3 (76)
9	240	41.0	3	3	**LDH41SX3S**	M	120 (55)	28 1/4 (718)	20 1/4 (514)	9 3/4 (248)	13 1/2 (343)	10 (254)	10 5/8 (269.9)	3 (76)
9	480	41.0	1	3	**LDH41SX11S**	M	120 (55)	28 1/4 (718)	20 1/4 (514)	9 3/4 (248)	13 1/2 (343)	10 (254)	10 5/8 (269.9)	3 (76)
9	480	41.0	3	3	**LDH41SX5S**	M	120 (55)	28 1/4 (718)	20 1/4 (514)	9 3/4 (248)	13 1/2 (343)	10 (254)	10 5/8 (269.9)	3 (76)
12	240	54.0	3	4	**LDH54SX3S**	M	135 (62)	28 1/4 (718)	20 1/4 (514)	12 3/4 (324)	16 1/2 (419)	13 (330)	13 5/8 (346.1)	3 (76)
12	480	54.0	1	3	**LDH54SX11S**	M	135 (62)	28 1/4 (718)	20 1/4 (514)	12 3/4 (324)	16 1/2 (419)	13 (330)	13 5/8 (346.1)	3 (76)
12	480	54.0	3	2	**LDH54SX5S**	M	135 (62)	28 1/4 (718)	20 1/4 (514)	12 3/4 (324)	16 1/2 (419)	13 (330)	13 5/8 (346.1)	3 (76)
15	240	68.0	3	5	**LDH68SX3S**	M	195 (89)	28 1/4 (718)	20 1/4 (514)	15 3/4 (400)	19 1/2 (495)	16 (406)	17 7/8 (454.0)	3 (76)
15	480	68.0	1	3	**LDH68SX11S**	M	195 (89)	28 1/4 (718)	20 1/4 (514)	15 3/4 (400)	19 1/2 (495)	16 (406)	17 7/8 (454.0)	3 (76)
15	480	68.0	3	5	**LDH68SX5S**	M	195 (89)	28 1/4 (718)	20 1/4 (514)	15 3/4 (400)	19 1/2 (495)	16 (406)	17 7/8 (454.0)	3 (76)
18	240	80.0	3	6	**LDH80SX3S**	M	205 (93)	28 1/4 (718)	20 1/4 (514)	18 3/4 (476)	22 1/2 (572)	19 (483)	20 7/8 (530.2)	3 (76)
18	480	80.0	1	6	**LDH80SX11S**	M	205 (93)	28 1/4 (718)	20 1/4 (514)	18 3/4 (476)	22 1/2 (572)	19 (483)	20 7/8 (530.2)	3 (76)
18	480	80.0	3	3	**LDH80SX5S**	M	205 (93)	28 1/4 (718)	20 1/4 (514)	18¾ (476)	22 1/2 (572)	19 (483)	20 7/8 (530.2)	3 (76)
21	240	95.0	3	7	**LDH95SX3S**	M	235 (107)	28 1/4 (718)	20 1/4 (514)	21 3/4 (552)	25 1/2 (848)	22 (559)	23 7/8 (606.4)	3 (76)
21	480	95.0	1	7	**LDH95SX11S**	M	235 (107)	28 1/4 (718)	20 1/4 (514)	21 3/4 (552)	25 1/2 (848)	22 (559)	23 7/8 (606.4)	3 (76)
21	480	95.0	3	7	**LDH95SX5S**	M	235 (107)	28 1/4 (718)	20 1/4 (514)	21 3/4 (552)	25 1/2 (848)	22 (559)	23 7/8 (606.4)	3 (76)
21	240	120.0	3	7	**LDH120SX3S**	M	260 (118)	33 (838)	25 (635)	21 3/4 (552)	25 1/2 (848)	22 (559)	23 7/8 (606.4)	3 (76)
21	480	120.0	1	7	**LDH120SX11S**	M	260 (118)	33 (838)	25 (635)	21 3/4 (552)	25 1/2 (848)	22 (559)	23 7/8 (606.4)	3 (76)
21	480	120.0	3	7	**LDH120SX5S**	M	260 (118)	33 (838)	25 (635)	21 3/4 (552)	25 1/2 (848)	22 (559)	23 7/8 (606.4)	3 (76)
21	480	160.0	3	7	**LDH160SX5S**	M	290 (132)	40 1/2 (1029)	32 1/2 (826)	21 3/4 (552)	25 1/2 (848)	22 (559)	23 7/8 (606.4)	3 (76)
21	480	200.0	3	7	**LDH200SX5S**	M	310 (141)	49 1/2 (1257)	41 1/2 (1054)	21 3/4 (552)	25 1/2 (848)	22 (559)	23 7/8 (606.4)	3 (76)
24	480	225.0	3	8	**LDH225SX5S**	M	330 (150)	49 1/2 (1257)	41 1/2 (1054)	24 3/4 (629)	28 1/2 (724)	25 (635)	26 7/8 (682.6)	3 (76)

- **M** - Manufacturing lead times

Truck Shipment only

Notes:

- See *Watt Density vs. Air Temperature/Velocity* charts on page 393 to confirm suitability in the application.

Duct Heaters

D SERIES

Application: High Temperature Air 800°F (427°C)

- Removable alloy 840 WATROD elements
- Without thermostat
- General purpose enclosure
- Steel flange

① 6 and 12 element heaters have (1) 1 inch NPT conduit opening; 18, 24, 30 and 42 element heaters have (2) 1 inch NPT conduit openings; 36, 48, 54 and 60 element heaters have (2) 1 inch NPT and (2) 1 1/4 inch conduit openings

② All flanges are 12 inches wide

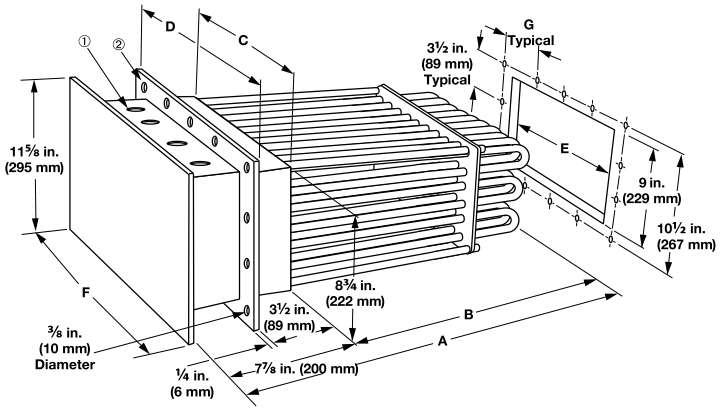

# of Elem.	Volts	kW	Ph	# Circ	Part Number	Del.	Ship Wt. lbs. (kg)	"A" Dim. in. (mm)	"B" Dim. in. (mm)	"C" Dim. in. (mm)	"D" Dim. in. (mm)	"E" Dim. in. (mm)	"F" Dim. in. (mm)	"G" Dim. in. (mm)
20 W/in² (3.1 W/cm²)														
6	240	6.0	1	1	**D6S10S**	M	50 (23)	27 7/8 (708)	20 (508)	2 3/4 (70)	6 1/2 (165)	3 (76)	5 3/4 (146)	2 1/2 (64)
6	240	6.0	3	1	**D6S3S**	M	50 (23)	27 7/8 (708)	20 (508)	2 3/4 (70)	6 1/2 (165)	3 (76)	5 3/4 (146)	2 1/2 (64)
6	480	6.0	1	1	**D6S11S**	M	50 (23)	27 7/8 (708)	20 (508)	2 3/4 (70)	6 1/2 (165)	3 (76)	5 3/4 (146)	2 1/2 (64)
6	480	6.0	3	1	**D6S5S**	M	50 (23)	27 7/8 (708)	20 (508)	2 3/4 (70)	6 1/2 (165)	3 (76)	5 3/4 (146)	2 1/2 (64)
12	240	12.0	1	1	**D12S10S**	M	55 (25)	27 7/8 (708)	20 (508)	4 3/4 (121)	8 1/2 (215)	5 (127)	7 3/4 (197)	3 1/2 (89)
12	240	12.0	3	1	**D12S3S**	M	55 (25)	27 7/8 (708)	20 (508)	4 3/4 (121)	8 1/2 (215)	5 (127)	7 3/4 (197)	3 1/2 (89)
12	480	12.0	1	1	**D12S11S**	M	55 (25)	27 7/8 (708)	20 (508)	4 3/4 (121)	8 1/2 (215)	5 (127)	7 3/4 (197)	3 1/2 (89)
12	480	12.0	3	1	**D12S5S**	M	55 (25)	27 7/8 (708)	20 (508)	4 3/4 (121)	8 1/2 (215)	5 (127)	7 3/4 (197)	3 1/2 (89)
18	240	18.0	1	2	**D18S10S**	M	65 (30)	27 7/8 (708)	20 (508)	6 3/4 (171)	10 1/2 (267)	7 (178)	9 3/4 (248)	3 (76)
18	240	18.0	3	1	**D18S3S**	M	65 (30)	27 7/8 (708)	20 (508)	6 3/4 (171)	10 1/2 (267)	7 (178)	9 3/4 (248)	3 (76)
18	480	18.0	1	1	**D18S11S**	M	65 (30)	27 7/8 (708)	20 (508)	6 3/4 (171)	10 1/2 (267)	7 (178)	9 3/4 (248)	3 (76)
18	480	18.0	3	1	**D18S5S**	M	65 (30)	27 7/8 (708)	20 (508)	6 3/4 (171)	10 1/2 (267)	7 (178)	9 3/4 (248)	3 (76)
24	240	24.0	1	2	**D24S10S**	M	95 (43)	27 7/8 (708)	20 (508)	8 3/4 (222)	12 1/2 (318)	9 (229)	11 3/4 (298)	2 3/4 (70)
24	240	24.0	3	2	**D24S3S**	M	95 (43)	27 7/8 (708)	20 (508)	8 3/4 (222)	12 1/2 (318)	9 (229)	11 3/4 (298)	2 3/4 (70)
24	480	24.0	1	1	**D24S11S**	M	95 (43)	27 7/8 (708)	20 (508)	8 3/4 (222)	12 1/2 (318)	9 (229)	11 3/4 (298)	2 3/4 (70)
24	480	24.0	3	1	**D24S5S**	M	95 (43)	27 7/8 (708)	20 (508)	8 3/4 (222)	12 1/2 (318)	9 (229)	11 3/4 (298)	2 3/4 (70)
30	240	30.0	3	2	**D30S3S**	M	120 (55)	27 7/8 (708)	20 (508)	10 3/4 (273)	14 1/2 (368)	11 (279)	13 3/4 (349)	3 1/4 (83)
30	480	30.0	1	2	**D30S11S**	M	120 (55)	27 7/8 (708)	20 (508)	10 3/4 (273)	14 1/2 (368)	11 (279)	13 3/4 (349)	3 1/4 (83)
30	480	30.0	3	1	**D30S5S**	M	120 (55)	27 7/8 (708)	20 (508)	10 3/4 (273)	14 1/2 (368)	11 (279)	13 3/4 (349)	3 1/4 (83)

CONTINUED

- **M** - Manufacturing lead times

Truck Shipment only

Notes:

- See *Watt Density vs. Air Temperature/Velocity* charts on page 393 to confirm suitability in the application.

Duct Heaters

D SERIES

Application: High Temperature Air 800°F (427°C)

- Removable alloy 840 WATROD elements
- Without thermostat
- General purpose enclosure
- Steel flange

① 6 and 12 element heaters have (1) 1 inch NPT conduit opening; 18, 24, 30 and 42 element heaters have (2) 1 inch NPT conduit openings; 36, 48, 54, and 60 element heaters have (2) 1 inch NPT and (2) 1 1/4 inch conduit openings

② All flanges are 12 inches wide

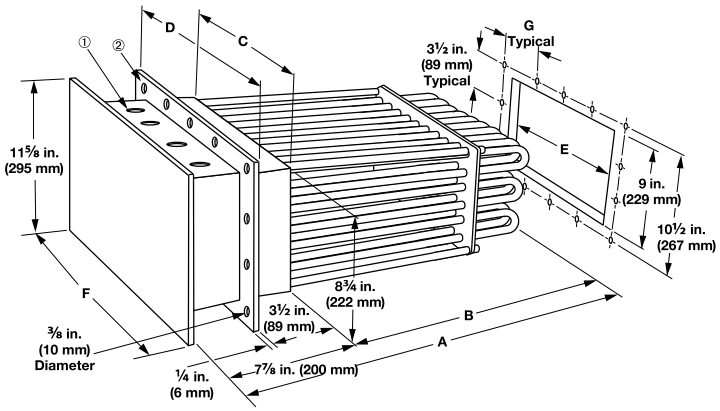

# of Elem.	Volts	kW	Ph	# Circ	Part Number	Del.	Ship Wt. lbs. (kg)	"A" Dim. in. (mm)	"B" Dim. in. (mm)	"C" Dim. in. (mm)	"D" Dim. in. (mm)	"E" Dim. in. (mm)	"F" Dim. in. (mm)	"G" Dim. in. (mm)
20 W/in² (3.1 W/cm²)														
36	240	36.0	3	2	**D36S3S**	M	135 (62)	27 7/8 (708.0)	20 (508)	12 3/4 (324)	16 1/2 (419)	13 (330)	15 3/4 (400)	3 3/4 (95)
36	480	36.0	1	2	**D36S11S**	M	135 (62)	27 7/8 (708.0)	20 (508)	12 3/4 (324)	16 1/2 (419)	13 (330)	15 3/4 (400)	3 3/4 (95)
36	480	36.0	3	1	**D36S5S**	M	135 (62)	27 7/8 (708.0)	20 (508)	12 3/4 (324)	16 1/2 (419)	13 (330)	15 3/4 (400)	3 3/4 (95)
42	240	42.0	3	2	**D42S3S**	M	155 (71)	27 7/8 (708.0)	20 (508)	14 3/4 (375)	18 1/2 (470)	15 (381)	17 3/4 (451)	4 1/4 (108)
42	480	42.0	1	2	**D42S11S**	M	155 (71)	27 7/8 (708.0)	20 (508)	14 3/4 (375)	18 1/2 (470)	15 (381)	17 3/4 (451)	4 1/4 (108)
42	480	42.0	3	2	**D42S5S**	M	155 (71)	27 7/8 (708.0)	20 (508)	14 3/4 (375)	18 1/2 (470)	15 (381)	17 3/4 (451)	4 1/4 (108)
48	240	48.0	3	4	**D48S3S**	M	195 (89)	27 7/8 (708.0)	20 (508)	16 3/4 (425)	20 1/2 (521)	17 (432)	19 3/4 (502)	4 3/4 (121)
48	480	48.0	1	2	**D48S11S**	M	195 (89)	27 7/8 (708.0)	20 (508)	16 3/4 (425)	20 1/2 (521)	17 (432)	19 3/4 (502)	4 3/4 (121)
48	480	48.0	3	2	**D48S5S**	M	195 (89)	27 7/8 (708.0)	20 (508)	16 3/4 (425)	20 1/2 (521)	17 (432)	19 3/4 (502)	4 3/4 (121)
54	240	54.0	3	3	**D54S3S**	M	205 (93)	27 7/8 (708.0)	20 (508)	18 3/4 (476)	22 1/2 (572)	19 (483)	21 3/4 (552)	5 1/4 (133)
54	480	54.0	1	3	**D54S11S**	M	205 (93)	27 7/8 (708.0)	20 (508)	18 3/4 (476)	22 1/2 (572)	19 (483)	21 3/4 (552)	5 1/4 (133)
54	480	54.0	3	2	**D54S5S**	M	205 (93)	27 7/8 (708.0)	20 (508)	18 3/4 (476)	22 1/2 (572)	19 (483)	21 3/4 (552)	5 1/4 (133)
60	240	60.0	3	4	**D60S3S**	M	235 (107)	27 7/8 (708.0)	20 (508)	20 3/4 (527)	24 1/2 (622)	21 (533)	23 3/4 (603)	5 3/4 (146)
60	480	60.0	1	4	**D60S11S**	M	235 (107)	27 7/8 (708.0)	20 (508)	20 3/4 (527)	24 1/2 (622)	21 (533)	23 3/4 (603)	5 3/4 (146)
60	480	60.0	3	2	**D60S5S**	M	235 (107)	27 7/8 (708.0)	20 (508)	20 3/4 (527)	24 1/2 (622)	21 (533)	23 3/4 (603)	5 3/4 (146)
60	240	75.0	3	4	**D75S3S**	M	260 (118)	32 7/8 (835.0)	25 (635)	20 3/4 (527)	24 1/2 (622)	21 (533)	23 3/4 (603)	5 3/4 (146)
60	480	75.0	1	4	**D75S11S**	M	260 (118)	32 7/8 (835.0)	25 (635)	20 3/4 (527)	24 1/2 (622)	21 (533)	23 3/4 (603)	5 3/4 (146)
60	480	75.0	3	2	**D75S5S**	M	260 (118)	32 7/8 (835.0)	25 (635)	20 3/4 (527)	24 1/2 (622)	21 (533)	23 3/4 (603)	5 3/4 (146)
60	480	100.0	3	4	**D100S5S**	M	290 (132)	40 3/8 (1025.5)	32 1/2 (826)	20 3/4 (527)	24 1/2 (622)	21 (533)	23 3/4 (603)	5 3/4 (146)
60	480	125.0	3	4	**D125S5S**	M	310 (141)	49 3/8 (1254.1)	41 1/2 (1054)	20 3/4 (527)	24 1/2 (622)	21 (533)	23 3/4 (603)	5 3/4 (146)

- **M** - Manufacturing lead times

Truck Shipment only

Notes:

- See *Watt Density vs. Air Temperature/Velocity* charts on page 393 to confirm suitability in the application.

Duct Heaters

D SERIES

Application: Medium Temperature Air 750°F (399°C)

- Removable alloy 840 WATROD elements
- Without thermostat
- General purpose enclosure
- Steel flange

① 6 and 12 element heaters have (1) 1 inch NPT conduit opening; 18, 24, 30 and 42 element heaters have (2) 1 inch NPT conduit openings; 36, 48, 54, and 60 element heaters have (2) 1 inch NPT and (2) 1 1/4 inch conduit openings

② All flanges are 12 inches wide

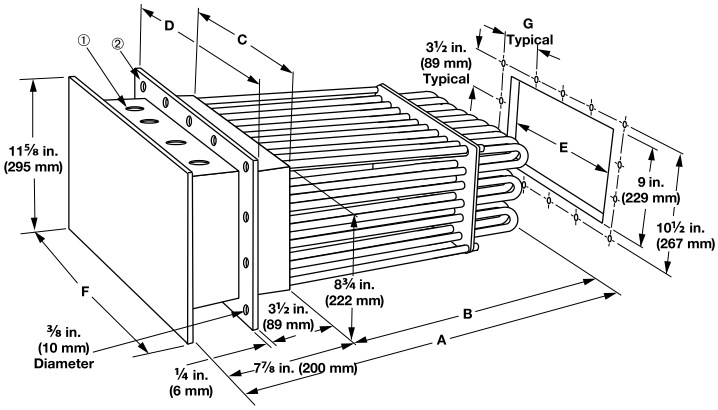

# of Elem.	Volts	kW	Ph	# Circ	Part Number	Del.	Ship Wt. lbs.	(kg)	"A" Dim. in.	(mm)	"B" Dim. in.	(mm)	"C" Dim. in.	(mm)	"D" Dim. in.	(mm)	"E" Dim. in.	(mm)	"F" Dim. in.	(mm)	"G" Dim. in.	(mm)
30 W/in² (4.7 W/cm²)																						
6	240	9.0	1	1	**D6SX10S**	M	50	(23)	27 7/8	(708)	20	(508)	2 3/4	(70)	6 1/2	(165)	3	(76)	5 3/4	(146)	2 1/2	(64)
6	240	9.0	3	1	**D6SX3S**	M	50	(23)	27 7/8	(708)	20	(508)	2 3/4	(70)	6 1/2	(165)	3	(76)	5 3/4	(146)	2 1/2	(64)
6	480	9.0	1	1	**D6SX11S**	M	50	(23)	27 7/8	(708)	20	(508)	2 3/4	(70)	6 1/2	(165)	3	(76)	5 3/4	(146)	2 1/2	(64)
6	480	9.0	3	1	**D6SX5S**	M	50	(23)	27 7/8	(708)	20	(508)	2 3/4	(70)	6 1/2	(165)	3	(76)	5 3/4	(146)	2 1/2	(64)
12	240	18.0	1	2	**D12SX10S**	M	55	(25)	27 7/8	(708)	20	(508)	4 3/4	(121)	8 1/2	(215)	5	(127)	7 3/4	(197)	3 1/2	(89)
12	240	18.0	3	1	**D12SX3S**	M	55	(25)	27 7/8	(708)	20	(508)	4 3/4	(121)	8 1/2	(215)	5	(127)	7 3/4	(197)	3 1/2	(89)
12	480	18.0	1	1	**D12SX11S**	M	55	(25)	27 7/8	(708)	20	(508)	4 3/4	(121)	8 1/2	(215)	5	(127)	7 3/4	(197)	3 1/2	(89)
12	480	18.0	3	1	**D12SX5S**	M	55	(25)	27 7/8	(708)	20	(508)	4 3/4	(121)	8 1/2	(215)	5	(127)	7 3/4	(197)	3 1/2	(89)
18	240	27.0	1	3	**D18SX10S**	M	65	(30)	27 7/8	(708)	20	(508)	6 3/4	(171)	10 1/2	(267)	7	(178)	9 3/4	(248)	3	(76)
18	240	27.0	3	2	**D18SX3S**	M	65	(30)	27 7/8	(708)	20	(508)	6 3/4	(171)	10 1/2	(267)	7	(178)	9 3/4	(248)	3	(76)
18	480	27.0	1	2	**D18SX11S**	M	65	(30)	27 7/8	(708)	20	(508)	6 3/4	(171)	10 1/2	(267)	7	(178)	9 3/4	(248)	3	(76)
18	480	27.0	3	1	**D18SX5S**	M	65	(30)	27 7/8	(708)	20	(508)	6 3/4	(171)	10 1/2	(267)	7	(178)	9 3/4	(248)	3	(76)
24	240	36.0	1	4	**D24SX10S**	M	95	(43)	27 7/8	(708)	20	(508)	8 3/4	(222)	12 1/2	(318)	9	(229)	11 3/4	(298)	2 3/4	(70)
24	240	36.0	3	2	**D24SX3S**	M	95	(43)	27 7/8	(708)	20	(508)	8 3/4	(222)	12 1/2	(318)	9	(229)	11 3/4	(298)	2 3/4	(70)
24	480	36.0	1	2	**D24SX11S**	M	95	(43)	27 7/8	(708)	20	(508)	8 3/4	(222)	12 1/2	(318)	9	(229)	11 3/4	(298)	2 3/4	(70)
24	480	36.0	3	1	**D24SX5S**	M	95	(43)	27 7/8	(708)	20	(508)	8 3/4	(222)	12 1/2	(318)	9	(229)	11 3/4	(298)	2 3/4	(70)
30	240	45.0	3	5	**D30SX3S**	M	120	(55)	27 7/8	(708)	20	(508)	10 3/4	(273)	14 1/2	(368)	11	(279)	13 3/4	(349)	3 1/4	(83)
30	480	45.0	1	2	**D30SX11S**	M	120	(55)	27 7/8	(708)	20	(508)	10 3/4	(273)	14 1/2	(368)	11	(279)	13 3/4	(349)	3 1/4	(83)
30	480	45.0	3	2	**D30SX5S**	M	120	(55)	27 7/8	(708)	20	(508)	10 3/4	(273)	14 1/2	(368)	11	(279)	13 3/4	(349)	3 1/4	(83)

CONTINUED

- **M** - Manufacturing lead times

Truck Shipment only

Notes:

- See *Watt Density vs. Air Temperature/Velocity* charts on page 393 to confirm suitability in the application.

Duct Heaters

D SERIES

Application: Medium Temperature Air 750°F (399°C)

- Removable alloy 840 WATROD elements
- Without thermostat
- General purpose enclosure
- Steel flange

① 6 and 12 element heaters have (1) 1 inch NPT conduit opening; 18, 24, 30 and 42 element heaters have (2) 1 inch NPT conduit openings; 36, 48, 54, and 60 element heaters have (2) 1 inch NPT and (2) 1 1/4 inch conduit openings

② All flanges are 12 inches. wide

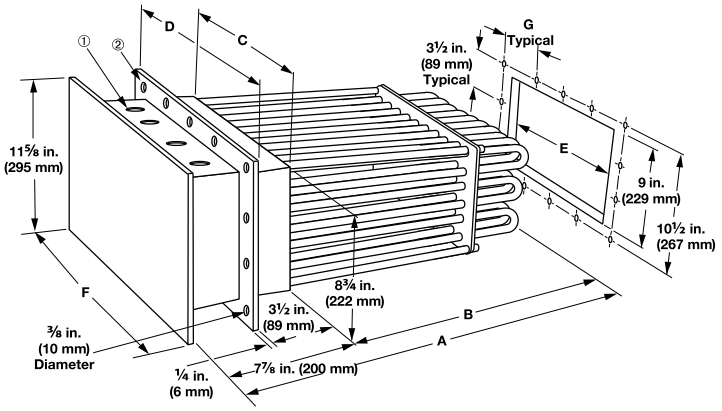

# of Elem.	Volts	kW	Ph	# Circ	Part Number	Del.	Ship Wt. lbs. (kg)	"A" Dim. in. (mm)	"B" Dim. in. (mm)	"C" Dim. in. (mm)	"D" Dim. in. (mm)	"E" Dim. in. (mm)	"F" Dim. in. (mm)	"G" Dim. in. (mm)
30 W/in² (4.7 W/cm²)														
36	240	54.0	3	3	**D36SX3S**	M	135 (62)	27 7/8 (708.0)	20 (508)	12 3/4 (324)	16 1/2 (419)	13 (330)	15 3/4 (400)	3 3/4 (95)
36	480	54.0	1	3	**D36SX11S**	M	135 (62)	27 7/8 (708.0)	20 (508)	12 3/4 (324)	16 1/2 (419)	13 (330)	15 3/4 (400)	3 3/4 (95)
36	480	54.0	3	2	**D36SX5S**	M	135 (62)	27 7/8 (708.0)	20 (508)	12 3/4 (324)	16 1/2 (419)	13 (330)	15 3/4 (400)	3 3/4 (95)
42	240	63.0	3	7	**D42SX3S**	M	155 (71)	27 7/8 (708.0)	20 (508)	14 3/4 (375)	18 1/2 (470)	15 (381)	17 3/4 (451)	4 1/4 (108)
42	480	63.0	1	3	**D42SX11S**	M	155 (71)	27 7/8 (708.0)	20 (508)	14 3/4 (375)	18 1/2 (470)	15 (381)	17 3/4 (451)	4 1/4 (108)
42	480	63.0	3	2	**D42SX5S**	M	155 (71)	27 7/8 (708.0)	20 (508)	14 3/4 (375)	18 1/2 (470)	15 (381)	17 3/4 (451)	4 1/4 (108)
48	240	72.0	3	4	**D48SX3S**	M	195 (89)	27 7/8 (708.0)	20 (508)	16 3/4 (425)	20 1/2 (521)	17 (432)	19 3/4 (502)	4 3/4 (121)
48	480	72.0	1	4	**D48SX11S**	M	195 (89)	27 7/8 (708.0)	20 (508)	16 3/4 (425)	20 1/2 (521)	17 (432)	19 3/4 (502)	4 3/4 (121)
48	480	72.0	3	2	**D48SX5S**	M	195 (89)	27 7/8 (708.0)	20 (508)	16 3/4 (425)	20 1/2 (521)	17 (432)	19 3/4 (502)	4 3/4 (121)
54	240	81.0	3	6	**D54SX3S**	M	205 (93)	27 7/8 (708.0)	20 (508)	18 3/4 (476)	22 1/2 (572)	19 (483)	21 3/4 (552)	5 1/4 (133)
54	480	81.0	1	6	**D54SX11S**	M	205 (93)	27 7/8 (708.0)	20 (508)	18 3/4 (476)	22 1/2 (572)	19 (483)	21 3/4 (552)	5 1/4 (133)
54	480	81.0	3	3	**D54SX5S**	M	205 (93)	27 7/8 (708.0)	20 (508)	18 3/4 (476)	22 1/2 (572)	19 (483)	21 3/4 (552)	5 1/4 (133)
60	240	90.0	3	5	**D60SX3S**	M	235 (107)	27 7/8 (708.0)	20 (508)	20 3/4 (527)	24 1/2 (622)	21 (533)	23 3/4 (603)	5 3/4 (146)
60	480	90.0	1	4	**D60SX11S**	M	235 (107)	27 7/8 (708.0)	20 (508)	20 3/4 (527)	24 1/2 (622)	21 (533)	23 3/4 (603)	5 3/4 (146)
60	480	90.0	3	4	**D60SX5S**	M	235 (107)	27 7/8 (708.0)	20 (508)	20 3/4 (527)	24 1/2 (622)	21 (533)	23 3/4 (603)	5 3/4 (146)
60	240	115.0	3	10	**D75SX3S**	M	260 (118)	32 7/8 (835.0)	25 (635)	20 3/4 (527)	24 1/2 (622)	21 (533)	23 3/4 (603)	5 3/4 (146)
60	480	115.0	1	5	**D75SX11S**	M	260 (118)	32 7/8 (835.0)	25 (635)	20 3/4 (527)	24 1/2 (622)	21 (533)	23 3/4 (603)	5 3/4 (146)
60	480	115.0	3	4	**D75SX5S**	M	260 (118)	32 7/8 (835.0)	25 (635)	20 3/4 (527)	24 1/2 (622)	21 (533)	23 3/4 (603)	5 3/4 (146)
60	480	150.0	3	4	**D100SX5S**	M	290 (132)	40 3/8 (1025.5)	32 1/2 (826)	20 3/4 (527)	24 1/2 (622)	21 (533)	23 3/4 (603)	5 3/4 (146)
60	480	190.0	3	5	**D125SX5S**	M	310 (141)	49 3/8 (1254.1)	41 1/2 (1054)	20 3/4 (527)	24 1/2 (622)	21 (533)	23 3/4 (603)	5 3/4 (146)

- **M** - Manufacturing lead times

Truck Shipment only

Notes:

- See *Watt Density vs. Air Temperature/Velocity* charts on page 393 to confirm suitability in the application.

Duct Heaters

LDH SERIES and D SERIES

Replacement Elements

Replaceable heating elements provide easy field service and reduce downtime. Element change-out is made simple by a single screw clamp.

To order replacement elements, specify the **replacement element part number** (from the table) that corresponds to the original Watlow duct heater part number. Then, specify **quantity.**

Replacement Elements

Original Duct Heater Part Numbers	Replacement Element Volts	Watts	A Dimension in.	(mm)	Replacement Element Part Number	Delivery	Est. Net Wt. lbs	(kg)
20 W/in² (3.1 W/cm²)								
D6S3 to D60S3	240	1000	27 7/8	(708.0)	**D6240**	M	1.0	(0.5)
D6S5 to D60S5	480	1000	27 7/8	(708.0)	**D6480**	M	1.0	(0.5)
D75S3	240	1250	32 7/8	(835.0)	**D75240**	M	1.0	(0.5)
D75S5	480	1250	32 7/8	(835.0)	**D75480**	M	1.0	(0.5)
D100S5	480	1667	40 3/8	(1025.5)	**D100480**	M	1.4	(0.7)
D125S5	480	2083	49 3/8	(1254.1)	**D125480**	M	1.7	(0.8)
30 W/in² (4.7 W/cm²)								
D6SX3 to D60SX3	240	1500	27 7/8	(708.0)	**D6X240**	M	1.0	(0.5)
D6SX5 to D60SX5	480	1500	27 7/8	(708.0)	**D6X480**	M	1.0	(0.5)
D75SX3	240	1917	32 7/8	(835.0)	**D75X240**	M	1.0	(0.5)
D75SX5	480	1917	32 7/8	(835.0)	**D75X480**	M	1.0	(0.5)
D100SX5	480	2500	40 3/8	(1025.5)	**D100X480**	M	1.4	(0.7)
D125SX5	480	3167	49 3/8	(1254.1)	**D125X480**	M	1.7	(0.8)

- **M** - Manufacturing lead times

Duct Heaters

LDH SERIES and D SERIES

Part Number

Stock Duct Part Number	Optional Terminal Enclosures	Optional Process Sensors	Sheath Limit Sensors

Stock Duct Part Number
Note: Catalog part numbers include optional enclosures. To order optional enclosures or sensors, substitute the appropriate suffix.

Optional Terminal Enclosures	
S =	General purpose enclosure
W=	Moisture resistant enclosure
Note: Catalog listing is a general purpose enclosure. Substitute enclosure options are noted.	

Optional Process Sensors	
PJ =	Type J process thermocouple in thermowell
PK=	Type K process thermocouple in thermowell

Sheath Limit Sensors	
HJ=	Type J high-limit thermocouple
HK=	Type K high-limit thermocouple

Example Part Number: D6SX10 S J HJ