# Watlow's PM PLUS™ Enhances the User Experience With an Interface That Enables Easy Set Up


Watlow's PM PLUS™, the enhanced EZ-ZONE® PM, is now more intuitive and features an enhanced interface for easier programming and readability with a SMOOTH-TOUCH™ keypad creating an industry leading user experience. The PM PLUS is backwards compatible with legacy EZ-ZONE PM controllers but offers many user upgrades including an intuitive menu flow allowing the controller to be easily configured. It also continues to offer the industry leading Bluetooth® connectivity with the EZ-LINK™ mobile app for remote access capability and full descriptions of parameters and error codes. The PM PLUS improves the user experience by reducing the complexity at the front of the control while eliminating the dependency of cables when configuring the product.

Like the original EZ-ZONE PM, the PM PLUS can be ordered as a PID controller, or an integrated controller with multiple functions combined into one.

## Features and Benefits

**Intuitive menu flow**
- Reduces menu structure to a list of lists allowing the controller to be easily configured
- Offers easy to read characters and color coding making the display visible from many angles

**SMOOTH TOUCH keypad**
- Eliminates contamination points on the front of the controller
- No mechanical components will wear out
- Creates a better seal on front panel
- Easy to clean

**Bluetooth® compatible with EZ-LINK™ mobile app**
- Provides full descriptions of parameters and error codes
- Allows remote access capabilities without the use of cables or converters
- Provides the ability to configure the product and save parameter sets

**Integrated PID and limit controller**
- Reduces wiring time and termination complexity compared with connecting discrete products
- Decreases required panel space
- Lowers installation costs
- Increases user and equipment safety for over/under temperature conditions

**High amperage power control output**
- Drives 15 ampere resistive loads directly
- Reduces component count
- Decreases cost of ownership

**Current monitoring**
- Detects heater current flow and provides alarm indication of a failed output device or heater load
- Drives output on open or shorted heater

**Serial communication capabilities**
- Provides a wide range of protocol choices including Modbus® RTU, EtherNet/IP™, Modbus® TCP, PROFIBUS DP, EtherCAT®, DeviceNet™, J1939 CAN bus and inter-module bus
- Supports network connectivity to a PC or PLC

**Enhanced control options**
- Easily handles complex process problems such as cascade, ratio, differential, square-root, motorized valve control without slidewire feedback, wet-bulb/dry-bulb, compressor control and peltier loads

**Watlow Ecosystem**
- The PM PLUS and ASPYRE AT can now be configured to display not only temperature but other important heater information such as amps, watts, ohms, voltage and other parameters using Watlow's proprietary inter-module bus protocol.
- PM PLUS and EZ-ZONE RM's can also communicate over the inter-module bus and have the ability to to add additional loops of control increase digital inputs and outputs.

## Features and Benefits (cont.)

**Countdown timer option**
- Provides batch process control
- Supports set point change during countdown

**10-point linearization curve**
- Improves sensor accuracy

**EZ-LINK™ mobile application for iPhone® and Android™**
- Expedites controller setup with intuitive navigation
- Simplifies setting parameters with plain text names and descriptions
- Connects quickly and easily via Bluetooth® wireless communications

**Configuration communications with software**
- Includes Watlow standard bus and inter-module bus communications used by COMPOSER®

**Advanced PID control algorithm**
- Offers TRU-TUNE®+ adaptive control to provide tighter control for demanding applications
- Provides auto-tune for fast, efficient start-up

**Built-in sensor compensation curves**
- Saves cost of buying compensated sensors
- Includes Vaisala RH and altitude (pressure) curves

**Remote set point operation**
- Supports convenient set point manipulation from a remote device such as a master control or PLC

**Profile capability**
- Offers pre-programmed process control
- Allows ramp/soak programming with 40 total steps

**Retransmit output**
- Supports industry needs for recording

**Factory Mutual (FM) approved over/under limit with auxiliary outputs**
- Increases user and equipment safety for over/under temperature conditions

**Memory for saving and restoring parameter settings**
- Decreases service calls and time down

**Agency approvals: UL® listed, CSA, CE, RoHS, W.E.E.E., FM, SEMI F47-0200, Class 1, Div. 2 rating on selected models**
- Assures prompt product acceptance
- Reduces end product documentation costs

**Touch-safe package**
- Increases safety for installer/operator
- Complies with IP2X requirements

**Programmable function key**
- Enables simple, one-touch operation of user-defined, repetitive activities

**Programmable menu system**
- Reduces setup time and increases operator efficiency

**Three-year warranty**
- Provides product support and reliability

## Specifications

**Controller**
- User-selectable heat/cool, on-off, P, PI, PD, PID or alarm action
- Auto-tune with TRU-TUNE+ adaptive control algorithm
- Control sampling rates: input = 10Hz, outputs = 10Hz

**Profile Ramp/Soak**
- 4 profiles, 40 total steps
- Accuracy (typical): ±30 PPM at 77°F (25°C) +30/-100 PPM at -4 to 149°F (-20 to 65°C)

**Isolated Serial Communications**
- EIA 232/485, Modbus® RTU
- EtherNet/IP™/Modbus® TCP
- DeviceNet™
- PROFIBUS DP
- SAE J1939 CAN bus
- EtherCAT®

**Wiring Termination—Touch-Safe Terminals**
- Input, power and controller output terminals are touch safe, removable, 12 to 22 AWG

**Universal Input**
- Thermocouple, grounded or ungrounded sensors greater than 20MΩ input impedance, 3µA open sensor detection, 2kΩ source resistance max.
- RTD 2- or 3-wire, platinum, 100Ω and 1000Ω @ 32°F (0°C) calibration to DIN curve (0.00385 Ω/Ω/°C)
- Process, 0-20mA @ 100Ω, or 0-10VDC @ 20kΩ, 0-50mV at 20MΩ, 0-1000Ω potentiometer; scalable; inverse scaling

**Functional Operating Range**

Type J: -346 to 2192°F (-210 to 1200°C)
Type K: -454 to 2500°F (-270 to 1371°C)
Type T: -454 to 750°F (-270 to 400°C)
Type E: -454 to 1832°F (-270 to 1000°C)
Type N: -454 to 2372°F (-270 to 1300°C)
Type C: 32 to 4200°F (0 to 2315°C)
Type D: 32 to 4200°F (0 to 2315°C)
Type F: 32 to 2449°F (0 to 1343°C)
Type R: -58 to 3214°F (-50 to 1767°C)
Type S: -58 to 3214°F (-50 to 1767°C)
Type B: 32 to 3300°F (0 to 1816°C)
RTD (DIN): -328 to 1472°F (-200 to 800°C)
Process: -1999 to 9999 units

**Accuracy**
- Calibration accuracy and sensor conformity: ±0.1% of span, ±1°C @ the calibrated ambient temperature and rated line voltage
- Types R, S, B; 0.2%
- Type T below -50°C; 0.2%
- Calibration ambient temperature @ 77°F ±5°F (25°C ±3°C)
- Accuracy span: 1000°F (540°C) min.
- Temperature stability: ±0.1°F/°F (±0.1°C/°C) rise in ambient max.

**Thermistor Input**
- 0 to 40kΩ, 0 to 20kΩ, 0 to 10kΩ, 0 to 5kΩ
- 2.252kΩ and 10kΩ base at 77°F (25°C)

## Specifications (cont.)

- Linearization curves built-in

**Current Transformer Input**

- Accepts 0-50mA signal (user-programmable range)
- Displayed operating range and resolution can be scaled and are user-programmable

**Digital Inputs (DC Voltage)**

- Max. input: 36V at 3mA
- Logic: min. high state 3V at 0.25mA, max. low state 2V

**Digital Inputs (Dry Contact)**

- Logic: min. open resistance 10kΩ, max. closed resistance 50Ω
- Max. short circuit: 20mA

**2 Digital I/O (ordered with power supply option)**

- Update rate: 10Hz
- Input type: user-selectable, dc voltage or dry contact
- Output type: switched dc
- Output voltage: 24V
- Output 5: 24mA max. or drive one 3-pole DIN-A-MITE®
- Output 6: 10mA max.

**6 Digital I/O (ordered with communication option)**

- Update rate: 10Hz
- Input type: user-selectable, dc voltage or dry contact
- Output type: user-selectable, switched dc or open collector
- Switched dc output voltage: 12 to 24VDC, depending on current draw
- Switched dc max. supplied current: 40mA at 20VDC and 80MA at 12VDC
- Switched dc max. low state: 2V
- Open collector max. switched voltage 32VDC
- Open collector max. switched current: 1.5A per output; 8A total for all 6 outputs

**Output Hardware**

- Switched dc: 22 to 32VDC @ 30mA max. per single output and 40mA max. total per paired outputs (1 & 2, 3 & 4)
- Open collector: 30VDC max. @ 100mA max.
- SSR, Form A, 24 to 240VAC, 1A at 50°F (10°C) to 0.5A at 149°F (65°C) resistive load, 264VAC max., opto-isolated, without contact suppression, 120/240VAC @ 20VA pilot duty
- Electromechanical relay, Form A, 24 to 240VAC or 30VDC max., 5A resistive load, 100,000 cycles at rated load, 120/240 @ 125VA or 24VAC @ 25VA pilot duty
- Electromechanical relay, Form C, 24 to 240VAC or 30VDC max., 5A resistive load, 100,000 cycles at rated load, 120/240 @ 125VA or 24VAC @ 25VA pilot duty
- NO-ARC relay, Form A, 85 to 264VAC, 15A @ 122°F (50°C), resistive load, no VDC, 2,000,000 cycles at rated load
- Universal process output: range selectable; 0 to 10VDC ±15mV into a min. 1,000Ω load with 2.5mV nominal resolution; 0 to 20mA ±30µA into max. 800Ω load with 5µA nominal resolution; temperature stability 100ppm/°C

**Operator Interface**

- LCD display
- SMOOTH TOUCH keypad
- Programmable function key(s)

**Line Voltage/Power**

- High voltage option: 85 to 264VAC, 47 to 63Hz
- Low voltage option: 20 to 28VAC, +10/-15%; 50/60Hz, ±5% or 12 to 40VDC
- Max. power consumption: 10VA ($^1/_{32}$ and $^1/_{16}$ DIN); 14VA

**Environment**

- Operating temperature: 0 to 149°F (-18 to 65°C)
- Storage temperature: -40 to 185°F (-40 to 85°C)
- Relative humidity: 0 to 90% RH, non-condensing

**Agency Approvals**

- cULus® UL®/EN/CSA C22.2 No 61010-1 Listed, File E185611
- CSA C22.2 No. 24, File 158031 ($^1/_{32}$ and $^1/_{16}$ DIN sizes)
- IP 67, IP 66 front seal
- UL® Type 4X front seal indoor locations
- cULus® ANSI/ISA 12.12.01-2012, CSA-C22.2 No. 213-1987, Class 1, Div. 2, Groups A, B, C and D, Temperature Code T4A, File E184390 (optional)
- FM Class 3545 (limit controls)
- CE, RoHS by design, W.E.E.E.
- EtherNet/IP™ and DeviceNet™ ODVA Conformance Tested displays
- EtherCAT® ETG.5003.2060 Conformance Tested

## Comparison of Available Features

| | PM6 PLUS | PM8/9 PLUS | PM4 PLUS |
|---|---|---|---|
| Display Type | LCD | LCD | LCD |
| Multi Language (English, German, Spanish) | Yes | Yes | Yes |
| Keypad Interface Type | SMOOTH-TOUCH™ | SMOOTH-TOUCH™ | SMOOTH-TOUCH™ |
| Express Model Available | None | None | None |
| PID Loops | 1 | 2 | 2 |
| Profile Ramp/Soak | 40 total steps | 40 total steps | 40 total steps |
| Profile Battery Backup and Real Time Clock | None | Yes | Yes |
| Number of Digital Inputs/Outputs | 0 to 2 | 0 to 8 | 0 to 8 |
| Number of Outputs | 1 to 2 | 1 to 4 | 1 to 4 |
| Integrated Safety Limits | Yes, 1 | Yes, 1 | Yes, 1 |
| Independent Safety Limit | None | None | None |
| Maximum Power Output 5A Mechanical Relay | 15A NO-ARC | 15A NO-ARC | 15A NO-ARC |
| Current Measurement (Accepts 0-50mA Signal From External Current Transformer) | Yes | Yes | Yes |
| Standard Bus and Inter-module BusCommunications | Yes | Yes | Yes |
| Bluetooth® Technology | Yes | Yes | Yes |
| Field Bus Communications (Modbus® RTU 232/485, EtherNet/IP™, Modbus® TCP, DeviceNet™, PROFIBUS DP, SAE J1939 CAN bus) | Yes | Yes | Yes |
| EtherCAT® Communication Protocol | No | Yes, PM9 | No |
| 10-Point Calibration Offset | Yes | Yes | Yes |
| Ratio, Differential and Square-Root | Yes | Yes | Yes |
| Sensor Compensation Curves-Altitude (Pressure) and Vaisala RH | Yes | Yes | Yes |
| Motorized Valve Control (Without Feedback) | Yes | Yes | Yes |
| Wet Bulb/Dry Bulb | Yes | Yes | Yes |
| Cascade | None | Yes | Yes |
| Countdown Timer | Yes | Yes | Yes |

## Dimensional Drawings

### PM6

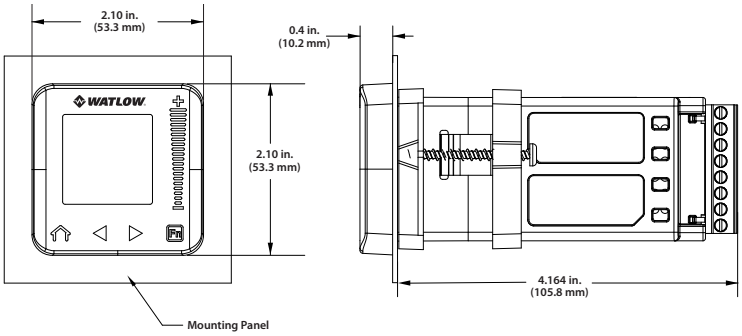


### PM6 - Recommended Panel Spacing

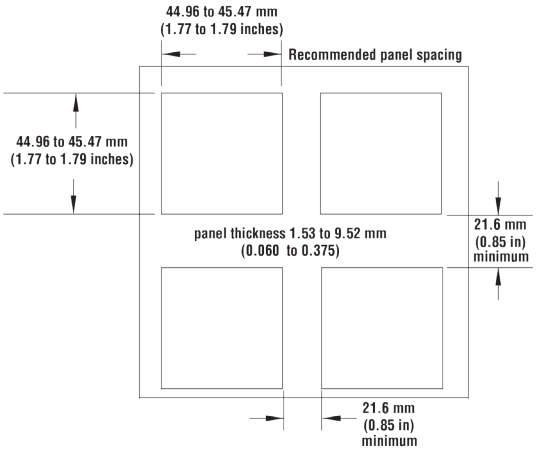

## Dimensional Drawings (cont.)

# PM8

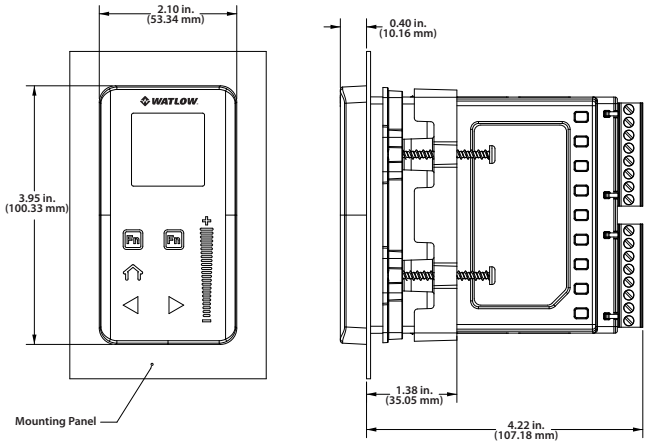


### PM8 - Recommended Panel Spacing

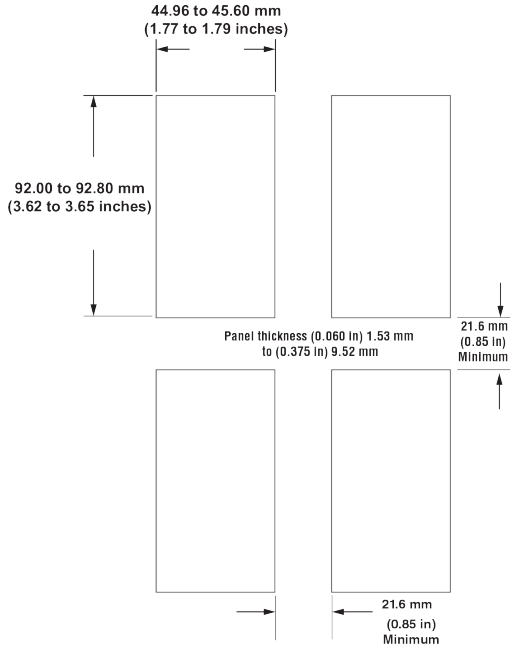


# PM9

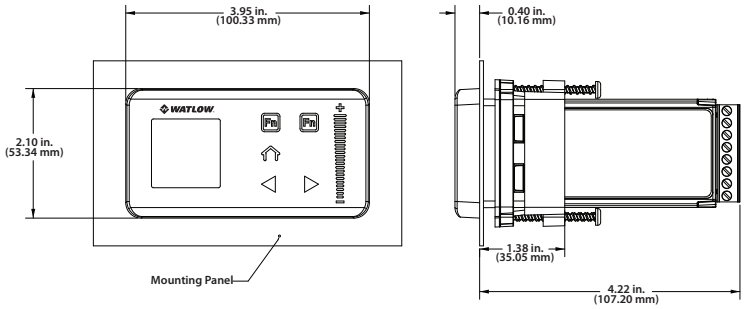


### PM9 - Recommended Panel Spacing

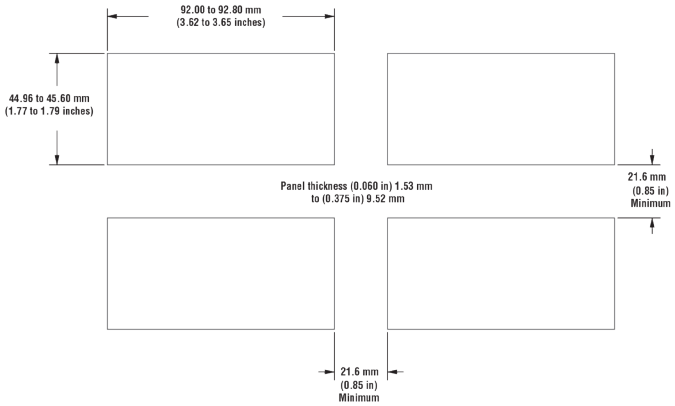


# PM4

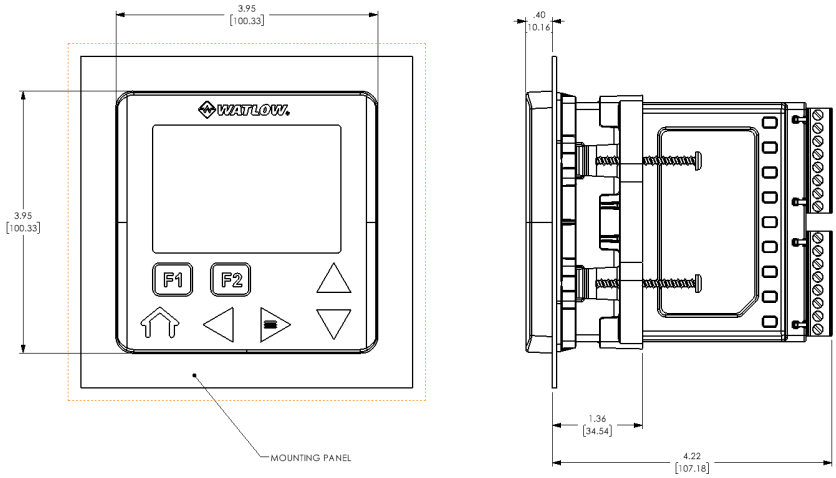


### PM4 - Recommended Panel Spacing

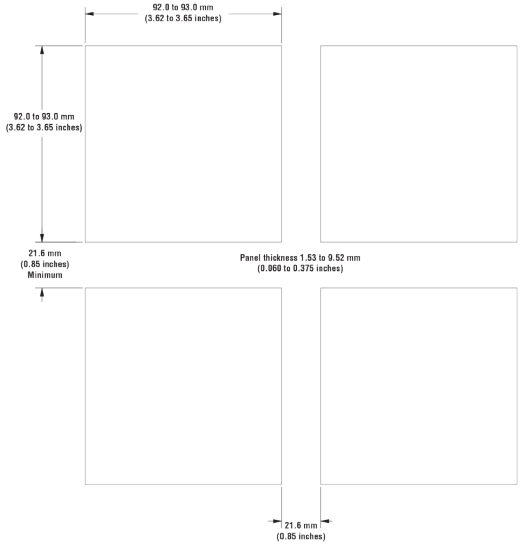

## Typical Block Diagram


## Compatible Accessories

**More information is available on these products at www.watlow.com**


Watlow's new EZ-LINK app allows users to easily setup, monitor and adjust Watlow EZ-ZONE PM and PM PLUS controllers via Bluetooth®. The app is available free-of-charge from the app store for phones and tablets, and provides access to the controller's parameters with fully spelled out names in plain text with help topics that explain each parameter and option. EZ-LINK mobile application connects quickly and easily via Bluetooth® wireless communications. Download the EZ-Link App for iPhone®. EZ-LINK at GET IT ON Google Play for Android™ or Download on the App Store

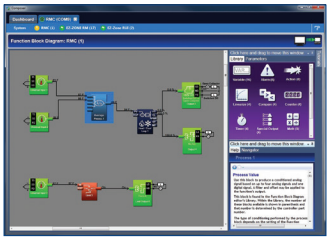

COMPOSER with INTUITION® is Watlow's easy-to-use software for configuring and customizing controllers. Use it to optimize Watlow's F4T and EZ-ZONE PM, PM PLUS and RM controllers for specific applications. Task-specific views simplify all aspects of commissioning new controllers including managing the inputs and outputs from pluggable flex modules, setting up functions such as control loops and alarms and creating and editing profiles. COMPOSER software is included on the "Watlow Support Tools" DVD and available for download at www.watlow.com.

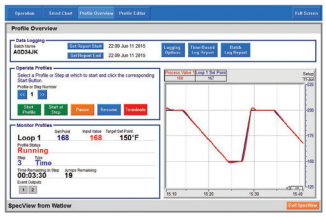

SpecView is designed for industrial users with features such as data logging, trending and support for bar code readers and touch screens. Errors are reduced, for any process, by creating application-specific screens. The software provides a historical replay option, easy-to-use recipe features and remote access options, including LAN, Internet and modem.

Silver Series EM touch screen operator interface terminals provide a customizable user interface, email event notifications and log and graph data for Watlow controllers and other devices. A Silver Series EM operator interface terminal paired with Watlow controllers is the perfect solution for your industrial process or machine control application.

# PM PLUS Integrated PID Controller Configuration Code

| ① ② | ③ Package Size | ④ Primary Functions | ⑤ Power Supply Digital I/O | ⑥ ⑦ Output 1 and 2 Hardware Options | – | ⑧ Comm. Options | ⑨ Auxiliary Control Functions | ⑩ ⑪ Output 3 and 4 Hardware Options | ⑫ Model Selection | ⑬ ⑭ Custom Options |
|---|---|---|---|---|---|---|---|---|---|---|
| PM | | | | | | | | | | |

| ③ | Package Size |
|---|---|
| 6 = | 1/16 DIN |
| 8 = | 1/8 DIN (vertical) |
| 9 = | 1/8 DIN (horizontal) |
| 4 = | 1/4 DIN |

| ④ | Primary Functions |
|---|---|
| C = | PID controller with universal input |
| B = | PID controller with universal input and profiling ramp/soak and battery back-up with real time clock |
| E = | PID controller with thermistor input and profiling ramp/soak and battery back-up with real time clock |
| R = | PID controller with universal input and profiling ramp/soak |
| T = | PID controller with universal input and countdown timer |
| J = | PID controller with thermistor input |
| N = | PID controller with thermistor input and profiling ramp/soak |
| S = | Custom firmware |

**Note:** Options B and E are not available with 1/16 DIN (PM6) models

| ⑤ | Power Supply, Digital Inputs/Outputs (I/O) |
|---|---|
| 1 = | 100 to 240VAC |
| 2 = | 100 to 240VAC plus 2 digital I/O points |
| 3 = | 20 to 28VAC or 12 to 40VDC |
| 4 = | 20 to 28VAC or 12 to 40VDC, plus 2 digital I/O points |

| ⑥ ⑦ | Output 1 and 2 Hardware Options | |
|---|---|---|
| | Output 1 | Output 2 |
| CA = | Switched dc/open collector | None |
| CH = | Switched dc/open collector | NO-ARC 15A power control |
| CC = | Switched dc/open collector | Switched dc |
| CJ = | Switched dc/open collector | Mechanical relay 5A, Form A |
| CK = | Switched dc/open collector | SSR Form A, 0.5A |
| EA = | Mechanical relay 5A, Form C | None |
| EH = | Mechanical relay 5A, Form C | NO-ARC 15A power control |
| EC = | Mechanical relay 5A, Form C | Switched dc |
| EJ = | Mechanical relay 5A, Form C | Mechanical relay 5A, Form A |
| EK = | Mechanical relay 5A, Form C | SSR Form A, 0.5A |
| FA = | Universal process | None |
| FC = | Universal process | Switched dc |
| FJ = | Universal process | Mechanical relay 5A, Form A |
| FK = | Universal process | SSR Form A, 0.5A |
| AK = | None | SSR Form A, 0.5A |
| KH = | SSR Form A, 0.5A | NO-ARC 15A power control |
| KK = | SSR Form A, 0.5A | SSR Form A, 0.5A |

| ⑧ | Communication Options or Additional Digital Outputs |
|---|---|
| **Standard bus always included** | |
| A = | None |
| B = | Bluetooth®* |
| E = | EIA 485 Modbus® RTU and Bluetooth®* |
| F = | Modbus® RTU 232/485 and Bluetooth®* |
| G = | EtherNet/IP™/ Modbus® TCP and Bluetooth®* |
| H = | DeviceNet™ and Bluetooth®* |
| J = | PROFIBUS DP and Bluetooth®* |
| K = | SAE J1939 CAN bus and Bluetooth®* |
| L = | EtherCAT® and Bluetooth® (1/8 DIN (Horizontal) - PM9 Only)* |
| 1 = | EIA 485 Modbus® RTU |
| 2 = | EIA 232/485 Modbus® RTU |
| 3 = | EtherNet/IP™/Modbus® TCP |
| 5 = | DeviceNet™ |
| 6 = | PROFIBUS DP |
| 7 = | SAE J1939 CAN bus |
| 8 = | EtherCAT® (1/8 DIN (Horizontal) PM9 Only)* |
| C = | 6 digital I/O (not available on 1/16 DIN models) |
| D = | 6 digital I/O and EIA 485 Modbus® RTU (not available on 1/16 DIN models) |
| M = | 6 digital I/O and Bluetooth® (not available on 1/16 DIN models)* |
| N = | 6 digital I/O and EIA 485 Modbus® RTU and Bluetooth® (not available on 1/16 DIN models)* |

***Note:** Bluetooth® not available in all countries, contact factory.

| ⑨ | Auxiliary Control Functions |
|---|---|
| A = | None |
| C = | 2nd PID channel with universal input (not valid on 1/16 DIN models) |
| J = | 2nd PID channel with thermistor input (not valid on 1/16 DIN models) |
| R = | Auxiliary 2nd input (universal input) |
| P = | Auxiliary 2nd input (thermistor input) |
| T = | Current transformer input (not valid Output 3 and 4) selections = FA, FC, FJ and FK) |
| L = | Integrated limit controller with universal input (only valid Output 3 and 4 selections = CJ, EJ and AJ) |
| M = | Integrated limit controller with thermistor input (only valid Output 3 and 4 selections = CJ, EJ and AJ) |

**Note:** If communication options F, G, H, J, K or 2 thru 7 is ordered in previous digit, then Option A must be ordered here.
All Models: Auxiliary input supports remote set point, backup sensor ratio, differential and wet-bulb/dry-bulb.

| ⑩ ⑪ | Output 3 and 4 Hardware Options | |
|---|---|---|
| | Output 3 | Output 4 |
| AA = | None | None |
| AJ = | None | Mechanical relay 5A, Form A |
| AK = | None | SSR Form A, 0.5A |
| CA = | Switched dc/open collector | None |
| CH = | Switched dc/open collector | NO-ARC 15A power control |
| CC = | Switched dc/open collector | Switched dc |
| CJ = | Switched dc/open collector | Mechanical relay 5A, Form A |
| CK = | Switched dc/open collector | SSR Form A, 0.5A |
| EA = | Mechanical relay 5A, Form C | None |
| EH = | Mechanical relay 5A, Form C | NO-ARC 15A power control |
| EC = | Mechanical relay 5A, Form C | Switched dc |
| EJ = | Mechanical relay 5A, Form C | Mechanical relay 5A, Form A |
| EK = | Mechanical relay 5A, Form C | SSR Form A, 0.5A |
| FA = | Universal process | None |
| FC = | Universal process | Switched dc |
| FJ = | Universal process | Mechanical relay 5A, Form A |
| FK = | Universal process | SSR Form A, 0.5A |
| KH = | SSR Form A, 0.5A | NO-ARC 15A power control |
| KK = | SSR Form A, 0.5A | SSR Form A, 0.5A |

1/16 **DIN Models:** If communication options F, G, H, J, K or 2 thru 7 is ordered in previous digit, then Option AA must be ordered here.

1/16 **DIN Models:** Output options CH, EH and KH are not valid.

| ⑫ | Model Selection (Inputs 1 and 2 are isolated) |
|---|---|
| P = | PM PLUS PID Version |
| V = | PM PLUS Enhanced firmware includes compressor control, cascade, ratio, defferential, square root, motorized valve control without feedback |

| ⑬ ⑭ | Custom Options |
|---|---|
| WP = | Watlow logo face plate |
| WN = | Face plate no logo/no name |
| WR = | Face plate no logo/name, 7 button (1/4 DIN only) |
| WS = | Watlow logo face plate, 7 button (1/4 DIN only) |
| AG = | Conformal coating |
| 12 = | Class 1, Div. 2 (not available with mechanical relay Output types E, H or J) |

# PM PLUS PID Model Configuration Code

| ① ② | ③ | ④ | ⑤ | ⑥ ⑦ | | ⑧ | ⑨ ⑩ ⑪ | ⑫ | ⑬ ⑭ |
|---|---|---|---|---|---|---|---|---|---|
| | Package Size | Primary Functions | Power Supply Digital I/O | Output 1 and 2 Hardware Options | – | Comm. Options | Future Options | Model Selection | Custom Options |
| PM | | | | | | | A A A | | |

| ③ | Package Size |
|---|---|
| 6 = | 1/16 DIN |
| 8 = | 1/8 DIN (Vertical) |
| 9 = | 1/8 DIN (Horizontal) |
| 4 = | 1/4 DIN |

| ④ | Primary Functions |
|---|---|
| C = | PID controller with universal input |
| R = | PID controller with universal input and profiling ramp/soak |
| T = | PID controller with universal input and countdown timer |
| J = | PID controller with thermistor input |
| N = | PID controller with thermistor input and profiling ramp/soak |

| ⑤ | Power Supply, Digital Inputs/Outputs (I/O) |
|---|---|
| 1 = | 100 to 240VAC |
| 2 = | 100 to 240VAC plus 2 digital I/O points |
| 3 = | 20 to 28VAC or 12 to 40VDC |
| 4 = | 20 to 28VAC or 12 to 40VDC, plus 2 digital I/O points |

| ⑥ ⑦ | Output 1 and 2 Hardware Options | |
|---|---|---|
| | Output 1 | Output 2 |
| CA = | Switched dc/open collector | None |
| CH = | Switched dc/open collector | NO-ARC 15A power control |
| CC = | Switched dc/open collector | Switched dc |
| CJ = | Switched dc/open collector | Mechanical relay 5A, Form A |
| CK = | Switched dc/open collector | SSR Form A, 0.5A |
| EA = | Mechanical relay 5A, Form C | None |
| EH = | Mechanical relay 5A, Form C | NO-ARC 15A power control |
| EC = | Mechanical relay 5A, Form C | Switched dc |
| EJ = | Mechanical relay 5A, Form C | Mechanical relay 5A, Form A |
| EK = | Mechanical relay 5A, Form C | SSR Form A, 0.5A |
| FA = | Universal process | None |
| FC = | Universal process | Switched dc |
| FJ = | Universal process | Mechanical relay 5A, Form A |
| FK = | Universal process | SSR Form A, 0.5A |
| AK = | None | SSR Form A, 0.5A |
| KH = | SSR Form A, 0.5A | NO-ARC 15A power control |
| KK = | SSR Form A, 0.5A | SSR Form A, 0.5A |

| ⑧ | Communication Options or Additional Digital Outputs |
|---|---|
| Standard bus always included | |
| A = | None |
| B = | Bluetooth®* |
| E = | EIA 485 Modbus® RTU and Bluetooth®* |
| F = | Modbus® RTU 232/485 and Bluetooth®* |
| G = | EtherNet/IP™/ Modbus® TCP and Bluetooth®* |
| H = | DeviceNet™ and Bluetooth®* |
| J = | PROFIBUS DP and Bluetooth®* |
| K = | SAE J1939 CAN bus and Bluetooth®* |
| L = | EtherCAT® and Bluetooth®* |
| 1 = | EIA 485 Modbus® RTU |
| 2 = | EIA 232/485 Modbus® RTU |
| 3 = | EtherNet/IP™/Modbus® TCP |
| 5 = | DeviceNet™ |
| 6 = | PROFIBUS DP |
| 7 = | SAE J1939 CAN bus |
| 8 = | EtherCAT® |
| C = | 6 digital I/O (not available on 1/16 DIN models) |
| D = | 6 digital I/O and EIA 485 Modbus® RTU (not available on 1/16 DIN models) |
| M = | 6 digital I/O and Bluetooth® (not available on 1/16 DIN models)* |
| N = | 6 digital I/O and EIA 485 Modbus® RTU and Bluetooth® (not available on 1/16 DIN models)* |
| ***Note:** Bluetooth® not available in all countries, contact factory. | |

| ⑨ ⑩ ⑪ | Future Options |
|---|---|
| AAA = | Future Options |

| ⑫ | Model Selection (Inputs 1 and 2 are isolated) |
|---|---|
| P = | PM PLUS PID Version |
| V = | PM PLUS Enhanced firmware |
| X = | Not an order option. Appears when Express menu selected. |

| ⑬ ⑭ | Custom Options |
|---|---|
| WP = | Watlow logo face plate |
| WN = | Face plate no logo/no name |
| WR = | Face plate no logo/name, 7 button (1/4 DIN only) |
| WS = | Watlow logo face plate, 7 button (1/4 DIN only) |
| AG = | Conformal coating |
| 12 = | Class 1, Div. 2 (not available with mechanical relay Output types E, H or J) |

Watlow®, Watlow ***SELECT***®, EZ-ZONE®, DIN-A-MITE®, COMPOSER®, TRU-TUNE® and INTUITION® are registered trademarks of Watlow Electric Manufacturing Company.
EZ-LINK™ and PM PLUS™ are trademarks of Watlow Electric Manufacturing Company.
UL® and CULus® are registered trademarks of Underwriter's Laboratories, Inc.
Modbus® is a registered trademark of Schneider Automation Incorporated.
Bluetooth® word mark and logos are registered trademarks owned by Bluetooth SIG, Inc.
DeviceNet™ and EtherNet/IP™ are trademarks of Open DeviceNet Vendors Association.
iPhone® is a registered trademark of Apple Corporation.
Android™ is a trademark of Google LLC.
EtherCAT® is a registered trademark of Beckhoff Automation GmbH.

*Powered by Possibility*

**To be automatically connected to the nearest North American Technical Sales Office:**

**1-800-WATLOW2 • www.watlow.com**

**International Technical Sales Offices:**

| | | | | | |
|---|---|---|---|---|---|
| **Austria** | +43 6244 20129 0 | **India** | +91 40 6661 2700 | **Mexico** | +52 442 256 2200 |
| **China** | +86 21 3532 8532 | **Italy** | +39 02 458 8841 | **Singapore** | +65 6773 9488 |
| **France** | +33 1 41 32 79 70 | **Japan** | +81 3 3518 6630 | **Spain** | +34 91 675 1292 |
| **Germany** | +49 7253 9400 0 | **Korea** | +82 2 2169 2600 | **Taiwan** | +886 7 288 5168 |
| | | | | **UK** | +44 115 964 0777 |

©2025 Watlow Electric Manufacturing Company all rights reserved.

WIN-PMPLUS-0125